Drg. No. 8002839

IF IN DOUBT ASK!

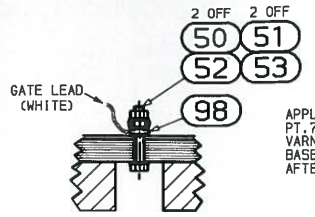

SECTION ON 'G'

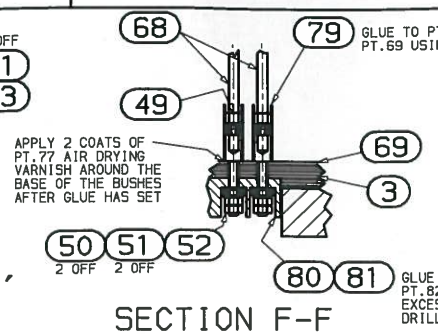

SECTION F-F

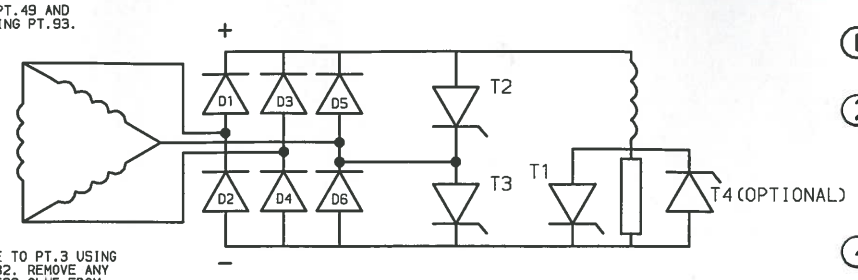

SCHEMATIC CONNECTIONS DIAGRAM

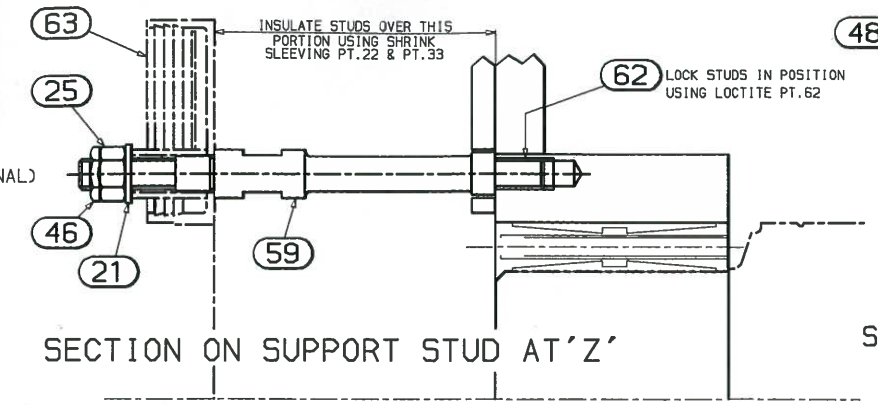

SECTION ON SUPPORT STUD AT 'Z'

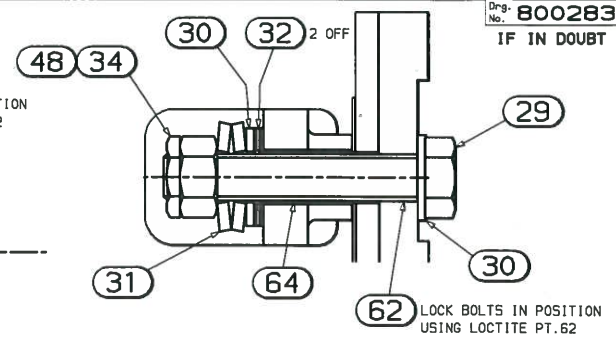

SECTION ON HEAT SINK FIXING STUD 'X'

ASSEMBLY NOTES

1. THYRISTORS T1-T4 HAVE 1 OFF RED & 1 OFF WHITE (GATE) FLYING LEAD EACH. RED LEAD TO BE REMOVED & WHITE (GATE) LEAD SHORTENED & THEN CONNECTED TO ADJACENT TERMINAL IN PCB, SEE SECTION ON 'G' ABOVE.
2. HEAT SINK COMPOUND PT.94 TO BE USED UNDER DIODE & ON BOTH SIDES OF THYRISTORS.
3. FORM, TIN & DRILL COPPER CONNS AS REQUIRED.
4. PROTECT ALL DIODE LEADS WITH HEAT SHRINKABLE WOVEN FABRIC TUBING (PT.75). SECURE LEADS TOGETHER USING CABLE TIES (PT.76).
5. TEST TO ENGINEERS INSTRUCTIONS.
6. FOR KEYED SHAFT, SEE 8009487.
7. CONNECTORS PTS 56 & 57 TO SUIT APPLICATION.

ASSEMBLY
APPROX MASS - 140Kg

TYPICAL ASSY (SEE SOD FOR SIZE No.)
ASSEMBLE TO SIZE 303
THICKNESS OF RINGS IN mm
PT.5 No.OFF COMPLETE RINGS

NOTE: FOR EVEN NUMBERED PAIRS OF RESISTOR SEGMENTS PT.44 IS TO BE PLACED ON THIS SIDE OF THE HUB ON ASSEMBLY

BALANCING
SINGLE PLANE BALANCE TO SM11026 USING BALANCE PROVISION ON BACK OF HUB PT.2.
MAX ALLOWABLE RESIDUAL UNBALANCE 1grm/metre

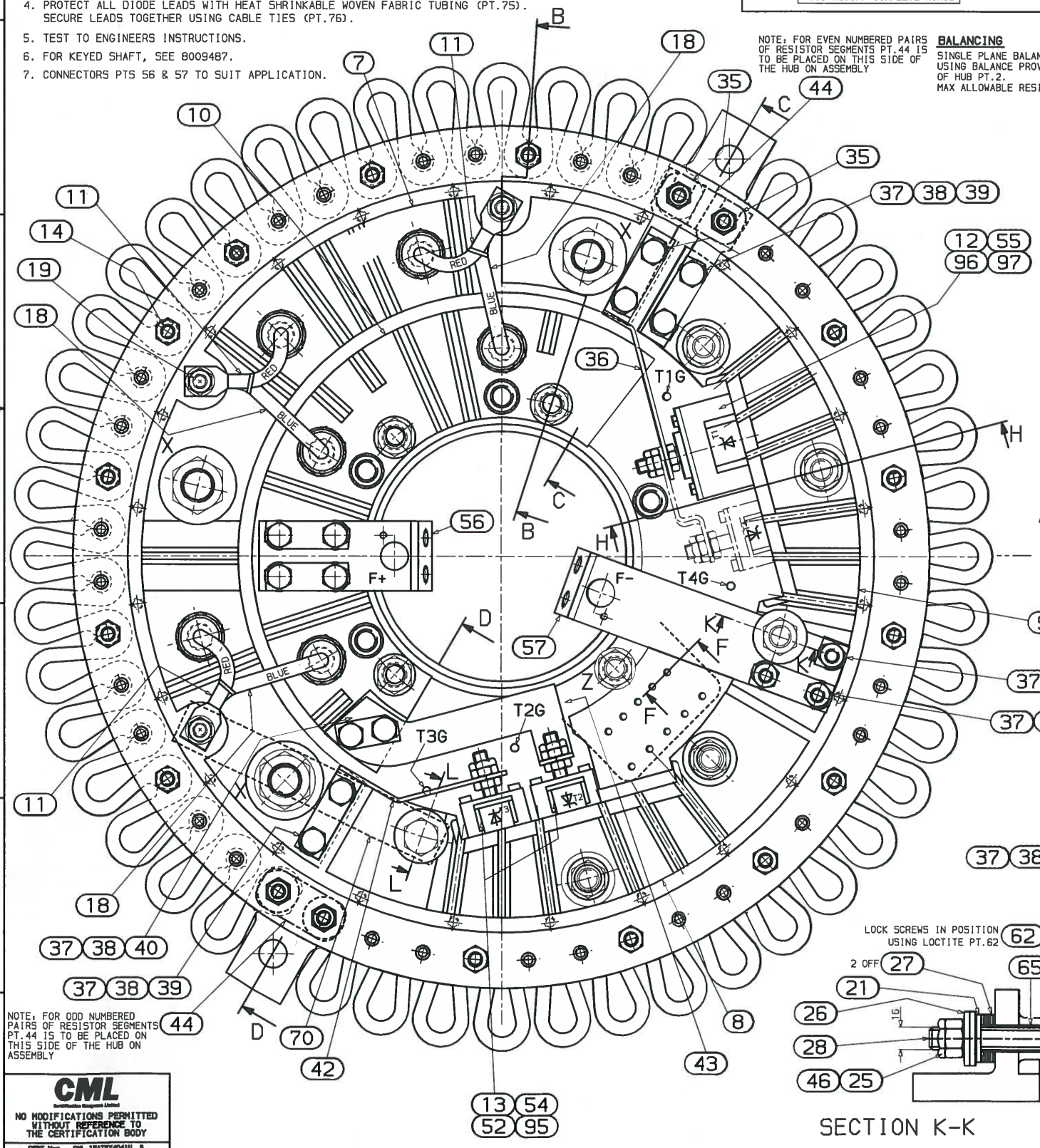

NOTE: FOR ODD NUMBERED PAIRS OF RESISTOR SEGMENTS PT.44 IS TO BE PLACED ON THIS SIDE OF THE HUB ON ASSEMBLY

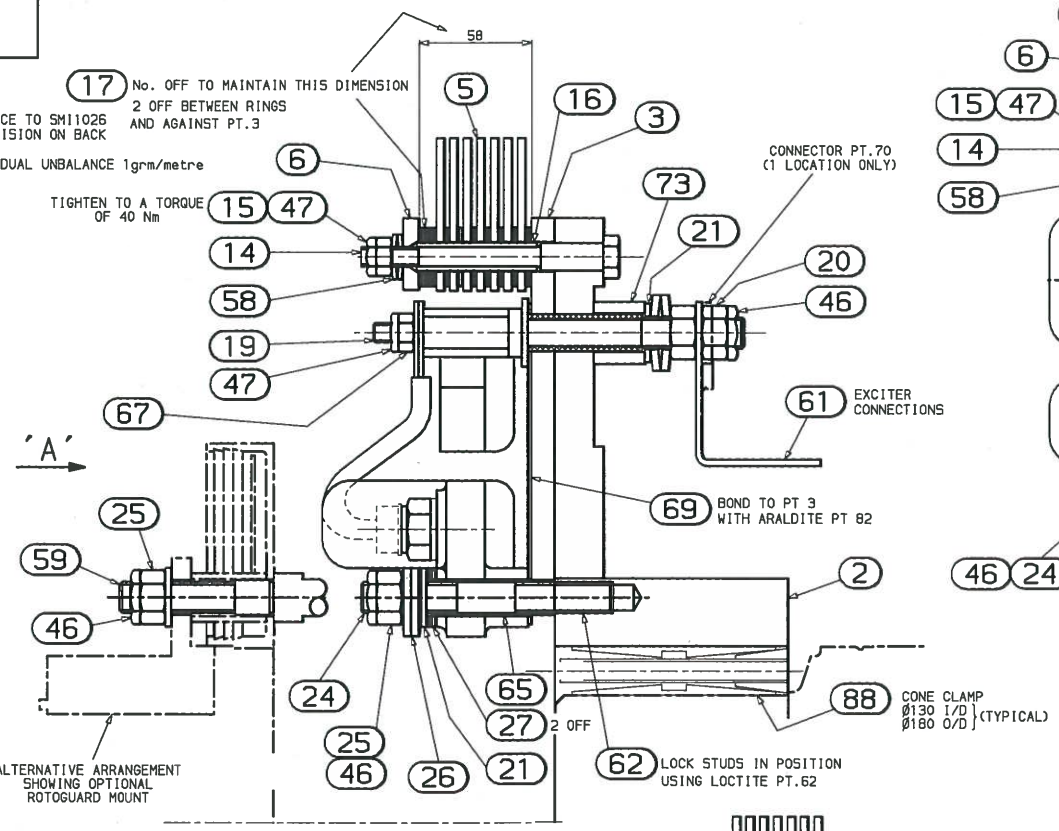

SECTION B-B

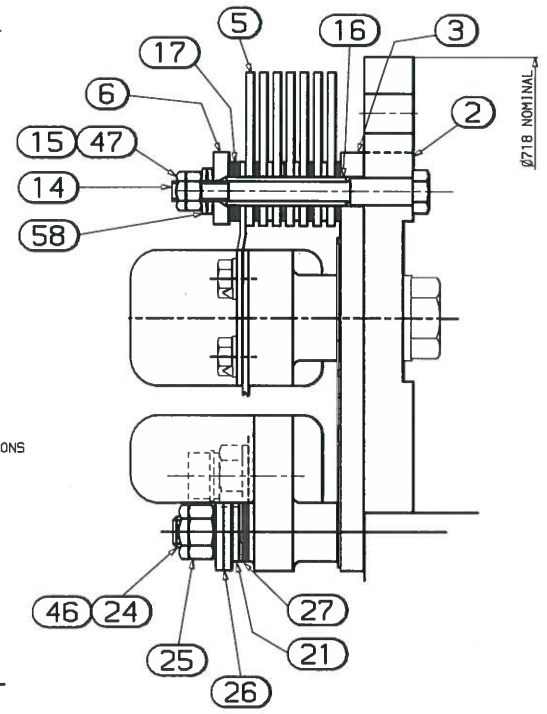

SECTION C-C

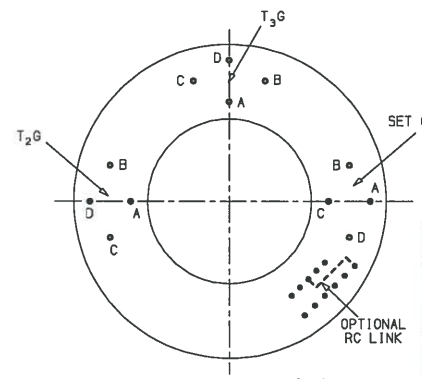

VIEW ON ARROW 'A'

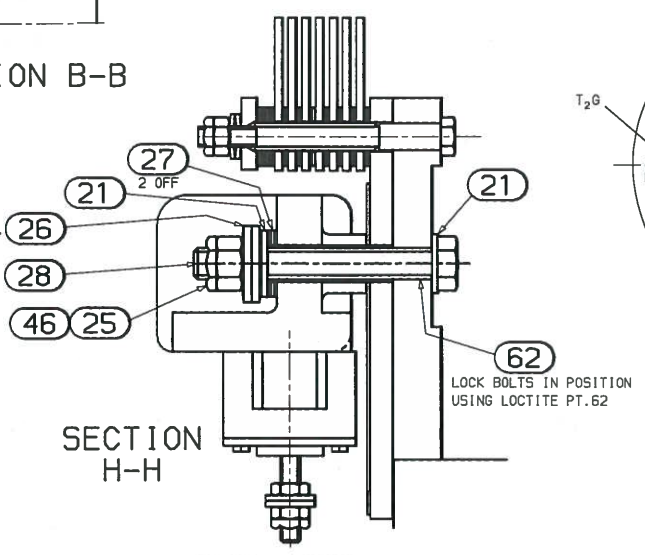

SECTION H-H

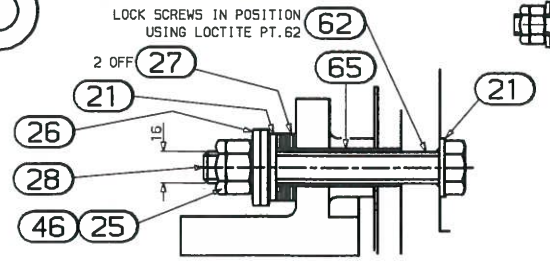

SECTION K-K

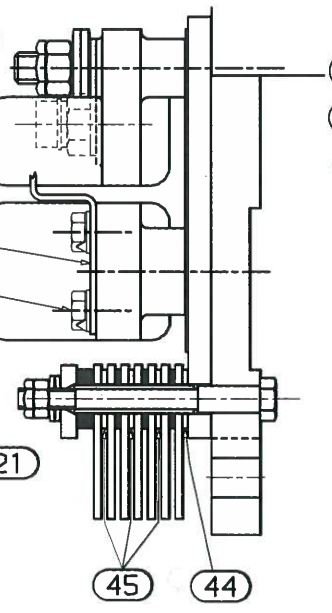

SECTION D-D

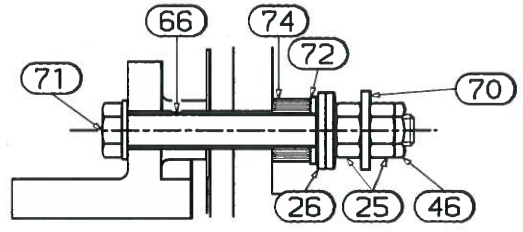

SECTION L-L

ZENER SETTINGS FOR RECTIFIER HUB (DETERMINED BY TEST DEPT)		
LINKS	T_2G	T_3G
A-D	300	400
A-C	400	500
B-D	500	600
A-B	600	700
C-D	700	800
NO LINKS	800	900

LINKS (PT 78)	RESISTANCE (Ω)
A-C	1000
A-D	679
A-B	1331
NO LINKS	1670

REVISION	
REVISION No. 7	
DATE 6-2-19	
CHD	APPD
NOTES 6,7 & CML BLOCK ADDED.	PV
REVISION No. 6	
DATE 30-04-15	
CHD	APPD
DIMENSIONS ADDED.	WDJ
REVISION No. 5	
DATE 17-03-15	
CHD	APPD
PARTS 79 & 81 ADDED.	WDJ
REVISION No. 4	
DATE 22-01-15	
CHD	APPD
GENERAL UPDATE.	WDJ
REVISION No. 3	
DATE 10-12-14	
CHD	APPD
GENERAL UPDATE.	WDJ
REVISION No. 2	
DATE 2-10-14	
CHD	APPD
"Cegelec" REPLACED BY "Quartzelec"	PV
REVISION No. 1	
DATE 7-5-14	
CHD	APPD
REVERSE CODING OF SIZE No.	PV

CML
Certification Management Limited
NO MODIFICATIONS PERMITTED WITHOUT REFERENCE TO THE CERTIFICATION BODY
CERT Nos. CML 18ATEX4041U & IECEx CML 18.0021U

quartz elec
Electrical Engineering Services
www.quartzelec.com 24 St Ruppers +44 (0)8705 862 403

TITLE: RECTIFIER & RESISTOR HUB ASSEMBLY
LATEST REV. NO. 7

This drawing is the property of Quartzelec Ltd. It may not be copied or used for any purpose other than for which it is supplied without the express written authority of Quartzelec Ltd

TOLERANCES UNLESS OTHERWISE STATED	SIZE	LINEAR		ANGULAR		RADIUS		CHAMFER		MACHINED SURFACE	
	UP TO 1000	±0.5		±0.5°		±0.5		±0.5		6.3	0.8
	1001 TO 2000	±1.0		±1.0°		±1.0		±1.0		12.5	0.8
TOLERANCES MUST NOT BE CUMULATIVE	2001 TO 3000	±1.5		±0.5°		±1.5		±1.5		25.0	0.8
	OVER 3000	±2.0		±0.5°		±2.0		±2.0		50.0	0.8

UNLESS OTHERWISE STATED
ALL DIMENSIONS IN mm
NVDG 1 ISO 286 TOLERANCE CLASS
ISO METRIC THREAD TOLS
EXTL. Eg (MTL. BH (MED. FIT)

Size A0	M/C Serial No ————
D/Type M	PROJECT No:23SEO Prod Group:AC
Sheet 1 of 1	Drawn:JORDAN Date:16-01-2007
	Sh'ds VALENTINEP App'd:VALENTINEP

PROJECTION

Copyright © 2015 Quartzelec Ltd

Drg. No. 8002839

Quartzelec Ltd